NK - Ultrasonic Level Switches

Benefits and Features

- No Moving Parts
- Ryton® (PPS), ABS or Polypropylene
- N/O or N/C Switch Function
- Easy to Use
- High Temperature Version Available (-40°F to 220°F)

General Description

The NK Ultrasonic Level Switch is used to monitor liquid levels and protect pumps. The ultrasonic function enables the switch to be used wherever traditional monitoring methods fail. The NK can monitor almost all homogeneous liquids regardless of low viscosity, density, solids content or conductivity.

The NK utilizes a fork-shaped sensor which contains two piezoelectric crystals facing each other. One of the crystals acts as the ultrasonic transmitter, and the other as a receiver. If the air gap between the points of the fork fills with liquid, the ultrasound passes from one crystal to the other. On receiving the signal, the integral electronics activate a relay output. The devices are equipped with an SPDT relay output. The required function (normally open or normally closed) may be selected using the appropriate connections. The relay is activated in the wet state.

Specifications

Material:
NK-5000: ABS Plastic
NK-6000: Polypropylene
NK-7000: Ryton (PPS)
Pressure: Max. 50 PSIG
Operating Temp:
NK-5000/6000: –4°F to 150 °F
NK-7000: -40 to 220°F
Power Input: 18–30 VAC or VDC
Current: 10 mA ± 5 mA dry (DC) 25 mA ± 10 mA wet

Power consumption: 0.6 W at 24 V / 1.2 W at max. 30 V
Cable: 10ft., PVC Jacketed
Switch Type: SPDT Relay
Max. Voltage: 100 VAC/VDC
Max. Current: 2 amps
Protection: NEMA 4X/IP65 (cable entry)
Delay:
100 msec dry/wet
0.5–1 sec wet/dry

Ordering Information

Material	Description
NK-7000	Ryton (PPS)
NK-5000	ABS Plastic
NK-6000	Polypropylene

5065 Vail Drive Acworth, GA 30101 Phone (770) 917-0940 Fax (770) 917-8352 Email Sales@Flow-Network.com

Dimensions

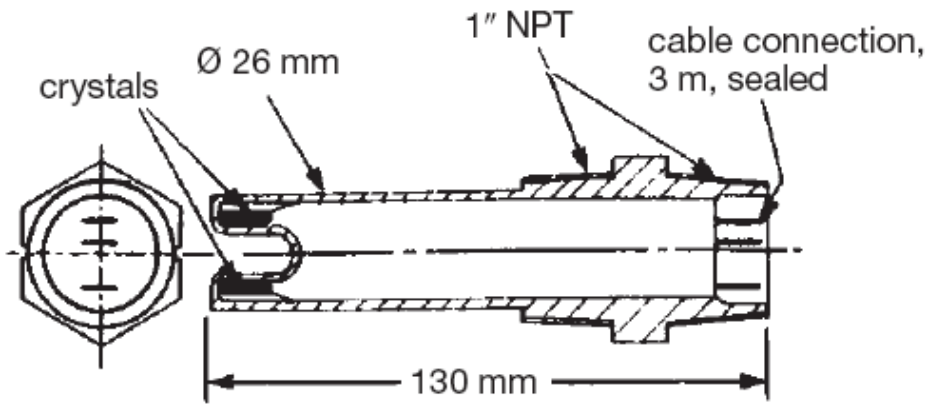

Electrical Connection

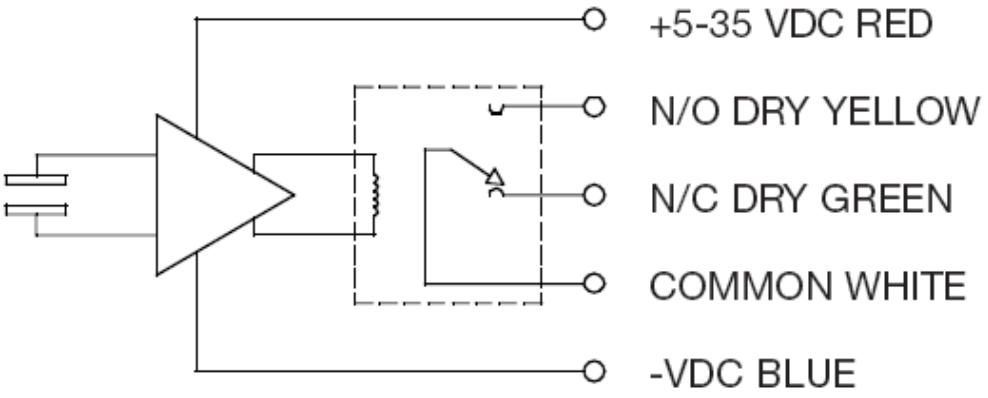

5065 Vail Drive Acworth, GA 30101 Phone (770) 917-0940 Fax (770) 917-8352 Email Sales@Flow-Network.com