Compact Magneto-Inductive Flowmeter

FlowNetwork
Industrial Sensing Solutions

MIK

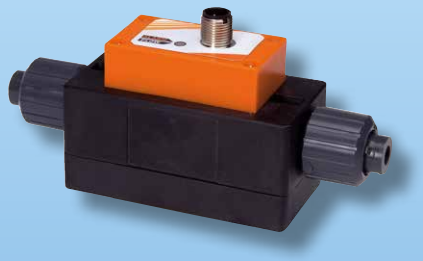

- Flow Ranges: 0.18...7.8 GPH to 9...180 GPM
- Accuracy: ±2 % of Full Scale
- p_{max}: 145 psi; t_{max}: 176 °F
- Connection: G½...G 2¾ Male with Optional NPT, Socket, and Hose Connections
- Materials: PPS Body with Stainless Steel Electrodes; PVDF Body with Hastelloy® or Tantalum Electrodes
- Electronic Packages: Frequency or Current Outputs, Adjustable Switches, and Integral Totalizers or Batch Controllers
- Highlights:
  · No Moving Parts in the Flow Body
  · Low Pressure Loss
  · Universal Mounting
  · High Quality at a Low Price

FlowNetwork
Industrial Sensing Solutions

Main Office
Phone **(770) 917-0940**
Fax **(770) 917-8352**
Sales@Flow-Network.com
www.flow-network.com

Description

The KOBOLD MIK flow meter is used for measuring and monitoring small to medium-sized flows of conductive liquids in pipes. The sensor operates according to the electromagnetic measurement principle. According to Faraday's Law of magnetic induction, a voltage is induced in a conductor moving through a magnetic field. The electrically conductive media acts as the conductor. The voltage induced in the media is proportional to the flow velocity and is therefore a value for the volumetric flow. The media must have a minimum conductivity of 30 µS /cm (200 µS /cm for U0 & U1 ranges) for proper operation. The induced voltage is picked up by two sensing electrodes which are in contact with the media and sent to the measuring amplifier. The flow rate will be calculated based on the cross sectional area of the pipe.

The measurement is not dependent on the process liquid and its material properties such as density, viscosity, and temperature. The device may be equipped with a switch, frequency, or analog output. Moreover, there is a compact electronic option, which contains a switch and an analog output. The sensor series is completed by an optional batching or totalizer electronic option. The totalizer electronic option displays the current flow rate on the first line of the display and shows the partial or grand total volume on the second. A batching electronic controls simple filling duties and also measures the flow rate, grand total volume, and filling volume. The analog output and two relay outputs can be utilized for the further processing.

Media

- Conductive Liquids
- Acids and Caustic Solutions
- Drinking, Cooling, and Waste Water
- Ground Water, Raw Water
- Aggressive or Salty Solutions
- Unsuitable for Oils & Other Low or Non-Conductive Medias

Areas of Application

Flow Monitoring, Flow Measuring, Batching and Totalizing for:

- Machine Building
- Chemical Industry
- Paper Industry
- Automobile Industry
- Cement Industry
- Laboratories

Technical Data

Range:	See Table
Accuracy:	±2.0 % of f. s.
Repeat Accuracy:	±1.0 % of f. s. (f. s. = full scale)
Measurement Process:	Electromagnetic
Electrical Conductivity:	Min. 30 µS /cm (MIK-..U0.. & MIK-.. U1.., Min. 200 µS /cm)
Mounting Position:	Universal, Flow in Direction of the Arrow
Inlet/Outlet Straight Run:	3 x PD / 2 x PD (Pipe Diameters)
Media Temperature:	-4 ... 176 °F (max. 140 °F with PVC-connection Set)
Ambient Temperature:	14 ... 140 °F
Max. Pressure:	145 psi
Max. Pressure Loss:	Max. 3.7 psi at f.s.
Max. Media Viscosity:	Max. 20 cSt for ranges: U0...U8 Max. 70 cSt for ranges: UA...UH

Wetted Parts

Sensor Housing:	PPS or PVDF, Fiberglass-reinforced
Native Connection:	G 1/2 to G 2-3/4
Optional Connection Set:	NPT, PVC-glue Connections, Hose Barb, or Butt Weld Connections 316L Stainless Steel
Electrodes:	316L Stainless Steel, Hastelloy C4, or Tantalum
Seal:	NBR, FKM, or FFKM
Response Time t_{90}:	ca. 1 s
Protection:	IP 65

Connection/Ranges

Native Connection	Inside Diameter	Flow Velocity at f.s.	Range
G ½ male	5 mm	approx. 0.45 m/s	0.18... 7.8 gph
		approx. 0.9 m/s	0.78... 15.6 gph
		approx. 2.7 m/s	2.4... 48.0 gph
G ¾ male	10 mm	approx. 2.2 m/s	0.13 ... 2.6 gpm
		approx. 3.5 m/s	0.2 ... 4.0 gpm
G 1 male	15 mm	approx. 3.0 m/s	0.4 ... 8.0 gpm
		approx. 4.7 m/s	0.65 ... 13 gpm
G 1 ½ male	20 mm	approx. 3.3 m/s	0.8... 16 gpm
		approx. 5.3 m/s	1.3 ... 26 gpm
G 2 male	32 mm	approx. 3.3 m/s	2.0 ... 40 gpm
		approx. 5.9 m/s	4.0 ... 75 gpm
G 2 ¾ male	54 mm	approx. 3.6 m/s	6.5 ... 130 gpm
		approx. 5.1 m/s	9.0 ... 180 gpm

MIK-...F300, MIK-...F390

Pulse Output:	PNP, Open Collector, max. 200 mA 500 Hz at f. s. (...F300) 50...1000 Hz at f. s. (...F390) Factory Set as per Customer Request
Power Supply:	24 V_{DC} ±20 %
Power Consumption:	60 mA
Electrical Connection:	Plug M 12 x 1

MIK-...S300, MIK-...S30D

Display:	Duo-LED for Switch Status
Switching Output:	Relay SPDT, Max. 1A/30V_{DC} or Active 24 V_{DC}, N/C / N/O
Switch Point:	10 ...100% of f. s. in 10%-Steps User Configured via Rotary Switch
Power Supply:	24 V_{DC} ±20 %
Power Consumption:	80 mA
Electrical Connection:	Plug M 12 x 1, 5-pin

MIK-...L343

Output:	4-20 mA, 3-wire
Max. Load:	500 Ω
Power Supply:	24 V_{DC} ±20%
Power Consumption:	80 mA
Electrical Connection:	Plug M 12 x 1

MIK-...L443 (Optional Use with AUF-3000)

Output:	4-20 mA, 3-wire
Max. Load:	500 Ω
Power Supply:	24 V_{DC} ±20%
Power Consumption:	80 mA
Electrical Connection:	Plug DIN 43650

MIK-...C3xx (Compact Electronics)

Display:	3-digit LED
Analog Output:	4...20 mA Adjustable (only MIK-...C34P)
Max. Load:	500 Ω
Switching Output:	1(2) Semiconductor PNP or NPN, Set at Factory
Contact Function:	N/C / N/O-Frequency Programmable
Settings:	Via 2 Buttons
Power Supply:	24 V_{DC} ±20 %, 3-wire
Power Consumption:	120 mA
Electrical Connection:	Plug M 12 x 1

MIK-...Ex4R (Totalizing Electronic)

Display:	LCD, 2 x 8 Digit, Illuminated Rate, Total, and Grand Total Unit Selectable
Quantity Meter:	8-digit
Analog Output:	4-20 mA Adjustable
Load:	Max. 500 Ω
Switching Output:	2 Relays, Max. 30 V / 2 A
Settings:	Via 4 buttons
Functions:	Reset, MIN / MAX Memory, Flow Switch, Monitoring for Total and Grand Total, Language
Power Supply:	24 V_{DC} ±20 %, 3-wire
Power Consumption:	Approx. 150 mA
Electrical Connections:	Cable Connection or M12 Plug

MIK-...Gx4R (Batching Electronic)

Display:	LCD, 2 x 8 Digit, Illuminated Batching, Total, and Grand Total Unit Selectable
Quantity Meter:	8-digit
Batch:	5-digit
Analog Output:	4-20 mA Adjustable
Load:	Max. 500 Ω
Switching Output:	2 relays, Max. 30 V / 2 A
Settings:	Via 4 Buttons
Functions:	Batching (Relay S2), Start, Stop, Reset, Fine Batching, Correction Amount, Flow Switch, Total Quantity, Language
Power Supply:	24 V_{DC} ±20 %, 3-wire
Power Consumption:	Approx. 150 mA
Electrical Connection:	Cable Connection or M12 Plug

Electrical Connections

MIK-...S300

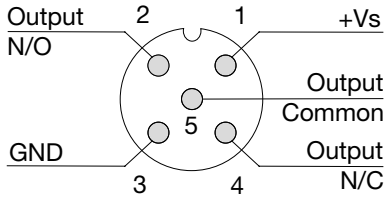

MIK-...S30D

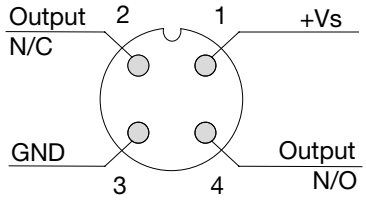

MIK-...L343, MIK-...F3x0

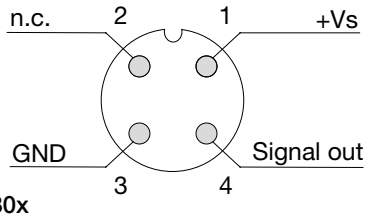

MIK-...L443

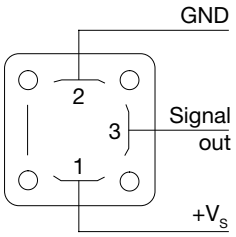

MIK-...C30x

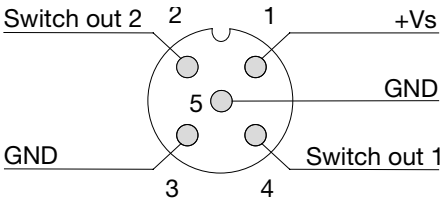

MIK-...C34x

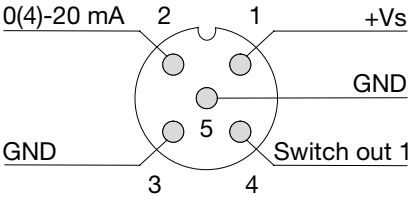

MIK-...E14R, MIK-...G14R Cable Connection

Wire Number	MIK-...E14R Totalizing Electronics	MIK-...G14R Batching Electronics
1	+24 V_{DC}	+24 V_{DC}
2	GND	GND
3	4-20 mA	4-20 mA
4	GND	GND
5	n.c.	Control 1*
6	Reset part quantity	Control 2*
7	Relay S1	Relay S1
8	Relay S1	Relay S1
9	Relay S2	Relay S2
10	Relay S2	Relay S2

Control 1 <-> GND: Start-Batching
Control 2 <-> GND: Stop-Batching
Control 1 <-> Control 2: Reset-Batching

Plug Connection

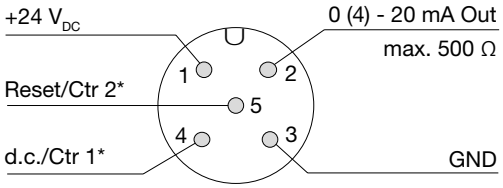

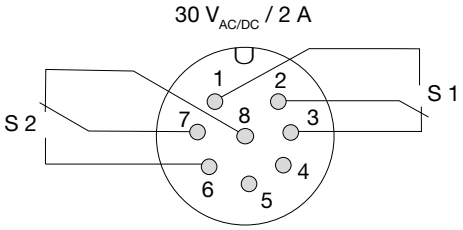

Order Details (Example: **MIK-5NA U5 A F300**)

Model	Measuring Range, Native Process Connection	Optional Fitting Set	Output/Electronics
MIK-5NA.. = PPS-housing, NBR-seal, stainless steel-electrode **MIK-5VA..** = PPS-housing, FKM-seal, stainless steel-electrode **MIK-6FC..** = PVDF-housing, FFKM-seal, Hastelloy-electrode **MIK-6FT..** = PVDF-housing, FFKM-seal, Tantalum-electrode	**..U0..** = 0.18…7.8 GPH, G ½ **..U1..** = 0.78…15.6 GPH, G ½ **..U2..** = 2.4…48.0 GPH, G ½	**..A..** = without [1] **..N..** = PVC, 1/4" NPT female **..P..** = PVC, 1/2" hose barb	**Frequency Output** **..F300** = M12-plug, 500 Hz **..F390** = M12-plug, 50...1000 Hz [2] **Switching Output** **..S300** = relay, M12-plug **..S30D** = active 24 V_{DC}, M12-plug **Analog Output** **..L343** = M12-plug, 4 - 20 mA **..L443** = DIN-plug, 4 - 20 mA **Compact Electronic**[3] **..C30R** = Open Coll. PNP (2x) **..C30M** = Open Coll. NPN (2x) **..C34P** = 4 - 20 mA, Open Coll. PNP **..C34N** = 4 - 20 mA, Open Coll. NPN **Totalizing Electronic** **..E14R** = LCD, 4-20 mA, relay (2x), 5' cable **..E34R** = LCD, 4-20 mA, relay (2x), M12 plug (2x) **Batching Electronic** **..G14R** = LCD, 4-20 mA, relay (2x), 5' cable **..G34R** = LCD, 4-20 mA, relay (2x), M12 plug (2x)
	..U4.. = 0.13…2.6 GPM, G ¾ **..U5..** = 0.2…4.0 GPM, G ¾	**..A..** = without [1] **..M..** = PVC, 3/8" PVC glue socket **..N..** = PVC, 3/8" NPT female **..P..** = PVC, 3/4" hose barb **..R..** = Polypropylene, 3/8" NPT female	
	..U7.. = 0.4…8.0 GPM, G 1 **..U8..** = 0.65…13 GPM, G 1	**..A..** = without [1] **..H..** = PVDF, 1/2" NPT female **..M..** = PVC, 1/2" glue socket **..N..** = PVC, 1/2" NPT female **..P..** = PVC, 1" hose barb **..R..** = Polypropylene, 1/2" NPT female **..V..** = PVDF, butt weld 20mm O.D. tube **..W..** = 316L SS, 1/2" NPT female **..X..** = Brass, 1/2" NPT female	
	..UA.. = 0.8...16 GPM, G 1½ **..UB..** = 1.3...26 GPM, G 1½	**..A..** = without [1] **..H..** = PVDF, 1" NPT female **..M..** = PVC, 1" glue socket **..N..** = PVC, 1" NPT female **..R..** = Polypropylene, 1" NPT female **..V..** = PVDF, butt weld 32mm O.D. tube	
	..UD.. = 2.0...40 GPM, G 2 **..UE..** = 4.0...75 GPM, G 2	**..A..** = without [1] **..H..** = PVDF, 1-1/4" NPT female **..M..** = PVC, 1-1/4" glue socket **..N..** = PVC, 1-1/4" NPT female **..R..** = Polypropylene, 1-1/4" NPT female	
	..UG.. = 6.5...130 GPM, G 2 ¾ **..UH..** = 9.0...180 GPM, G 2 ¾	**..A..** = without [1] **..H..** = PVDF, 2" NPT female **..M..** = PVC, 2" glue socket **..N..** = PVC, 2" NPT female **..R..** = Polypropylene, 2" NPT female	

Accessories: P/N **807.037** = 4-pin Micro-DC connector with 6-foot cable for output types F300, F390, L343, & S30D
P/N **807.007** = 5-pin Micro-DC connector with 6-foot cable for output types C3xx, S300, E34R, & G34R
P/N **807.087** = 8-pin Micro-DC connector with 6-foot cable for output types E34R & G34R

[1] incl. frontal gaskets (2 pc. O-rings)
[2] Please specify frequency at full scale in clear text while ordering
[3] Please clearly specify flow direction when ordering

Sensor Weight

Model	PPS	PVDF
MIK-...U0/U1/U2 (½")	approx. 0.40 lb	approx. 0.43 lb
MIK-...U4/U5 (¾")	approx. 0.42 lb	approx. 0.50 lb
MIK-...U7/U8 (1")	approx. 0.60 lb	approx. 0.72 lb
MIK-...UA/UB (1 ½")	approx. 0.90 lb	approx. 1.10 lb
MIK-...UD/UE (2")	approx. 1.24 lb	approx. 1.35 lb
MIK-...UG/UH (2 ¾")	approx. 2.65 lb	approx. 3.02 lb

Electronics Weight

Model	Weight
MIK-...F3x0 **MIK-...S30x** **MIK-...Lxx3**	approx. 0.18 lb
MIK-...C3xx	approx. 0.67 lb
MIK-...Exxx **MIK-...Gxxx**	approx. 0.56 lb

Total Weight = Sensor Weight + Electronics Weight

Dimensions

Model	G	L1	L2	L3	L4	L5	L6	H1	H2
MIK-xxxU0A MIK-xxxU1A MIK-xxxU2A	G ½	118	90	14	46	58	36	43	28
MIK-xxxU4A MIK-xxxU5A	G ¾	122	90	16	46	58	36	43	28
MIK-xxxU7A MIK-xxxU8A	G 1	126	90	18	46	58	36	49,5	29,5
MIK-xxxUAA MIK-xxxUBA	G1 ½	134	90	22	68	80	36	66	31,5
MIK-xxxUDA MIK-xxxUEA	G 2	138	90	24	68	80	36	72	36
MIK-xxxUGA MIK-xxxUHA	G 2¾	202	150	26	96	110	75	104	52

MIK-...F3x0, MIK-...S30x, MIK-...L343

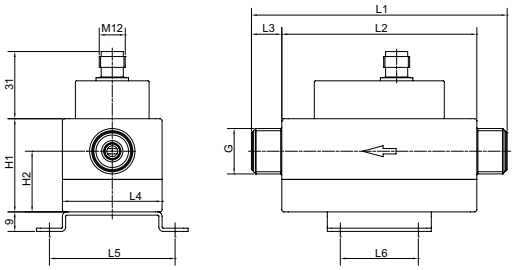

MIK-...L443

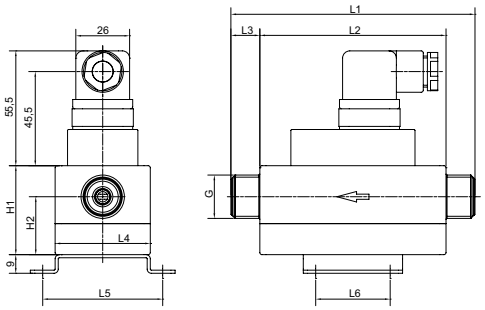

MIK-...C3xx

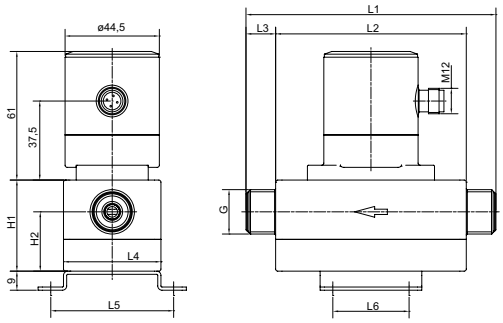

MIK-...Ex4R, MIK-...Gx4R

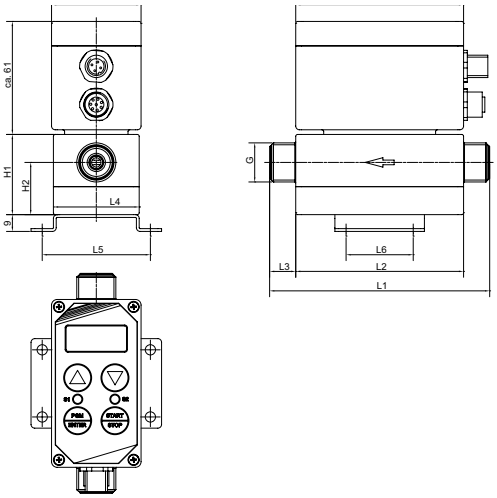

Dimensions Fitting Set ..H, M, N, R, W, X.. Connection

Reference table 7.1...table 7.5

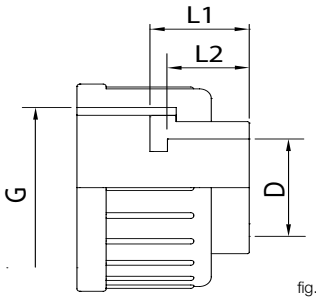

fig. 7.1

Dimensions Fitting Set ..N.. PVC- 1/4" NPT Connection

Reference table 7.1 G ½ only

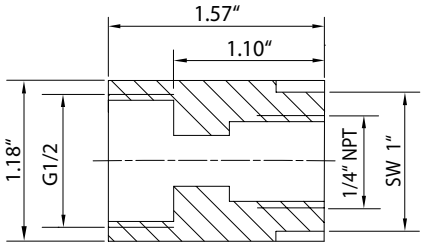

fig. 7.2

Dimensions Fitting Set ..N.. PVC-NPT Connection

G	L1	L2	D
G ½	Refer to figure 7.2		1/4" nom.
G ¾	0.68"	0.52"	3/8" nom.
G 1	0.76"	0.68"	1/2" nom.
G 1 ½	0.98"	0.87"	1" nom.
G 2	1.33"	0.98"	1-1/4" nom.
G 2 ¾	1.61"	0.98"	2" nom.

table 7.1

Dimensions Fitting Set ..H.. PVDF-NPT Connection

G	L1	L2	D
G 1	0.96"	0.79"	1/2" nom.
G 1 ½	1.09"	0.83"	1" nom.
G 2	1.34"	0.91"	1-1/4" nom.
G 2 ¾	1.65"	1.22"	2" nom.

table 7.3

Dimensions Fitting Set ..R.. PP-NPT Connection

G	L1	L2	D
G ¾	0.68"	0.55"	3/8" nom.
G 1	0.98"	0.79"	1/2" nom.
G 1 ½	1.24"	0.94"	1" nom.
G 2	1.48"	1.18"	1-1/4" nom.
G 2 ¾	1.68"	1.22"	2" nom.

table 7.4

Dimensions Fitting Set ..M.. PVC-IPS Glue Connection

G	L1	L2	D
G ¾	0.87"	0.79"	3/8" nom.
G 1	1.0"	0.89"	1/2" nom.
G 1 ½	1.24"	1.14"	1" nom.
G 2	1.51"	1.39"	1-1/4" nom.
G 2 ¾	1.61"	1.5"	2" nom.

table 7.2

Dimensions Fitting Set ..W, X.. SS/Brass-NPT Connection

G	L1	L2	D
G 1	1.18"	0.63"	1/2" nom.

table 7.5

Dimensions Fitting Set ..V.. Butt Weld

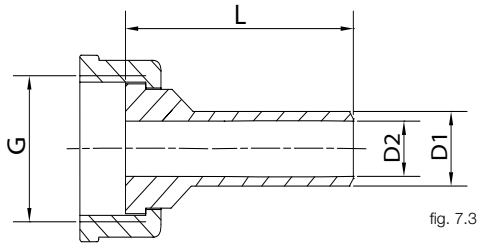

fig. 7.3

G	L	D1	D2
G 1	2.09"	0.79"	0.62"
G 1 ½	2.32"	1.26"	1.05"

table 7.6

Dimensions Fitting Set ..P.. PVC-Hose Connection

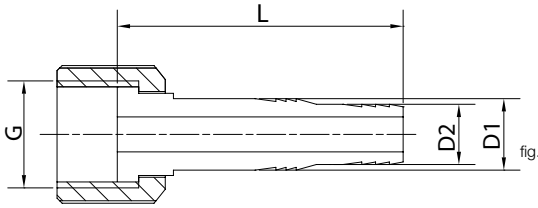

fig. 7.4

G	L	D1	D2
G ½	2.2"	0.55"	0.47"
G ¾	2.36"	0.71"	0.63"
G 1	2.64"	0.87"	0.79"

table 7.7